全漢企業股份有限公司
FSP TECHNOLOGY INC.

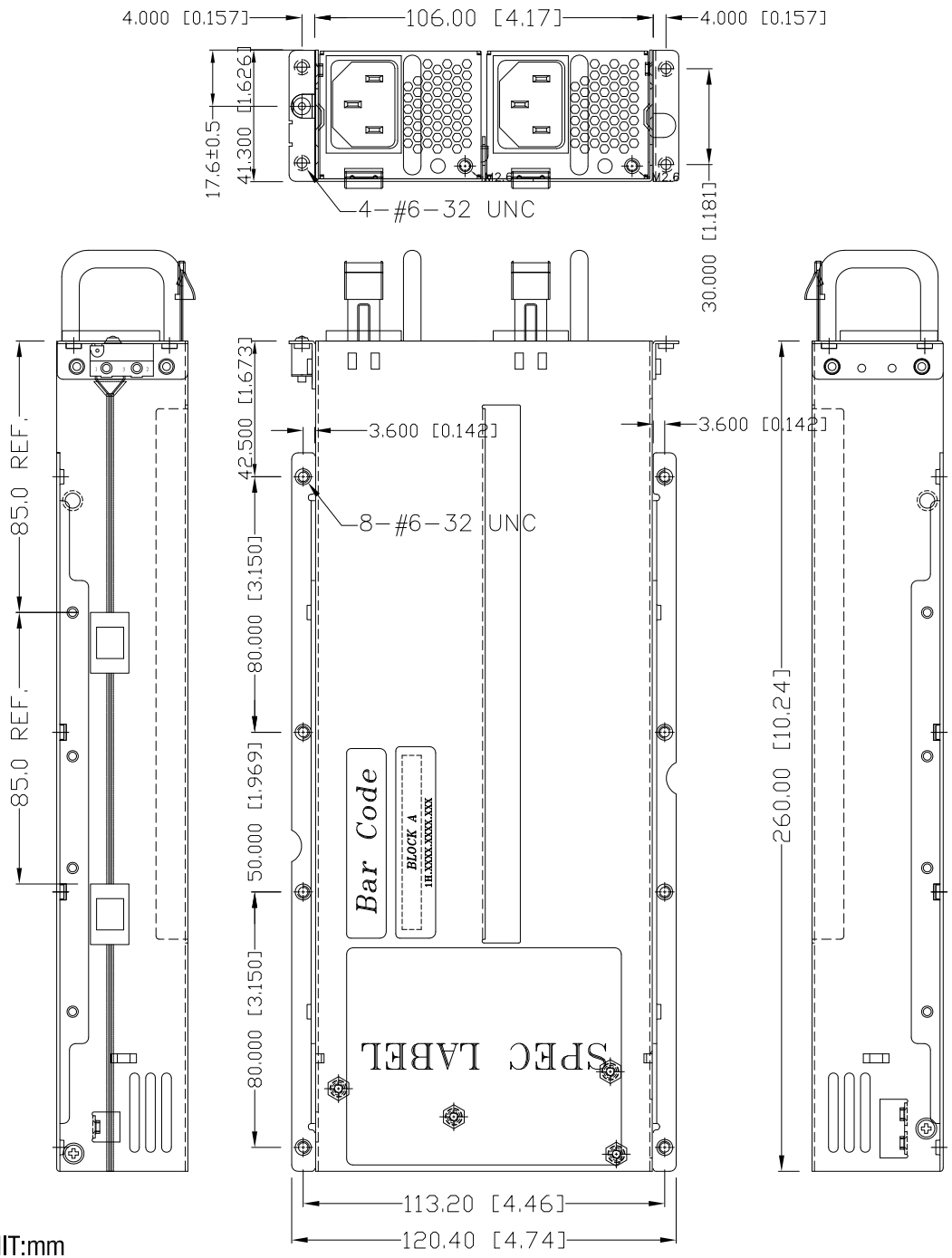

UNIT:mm

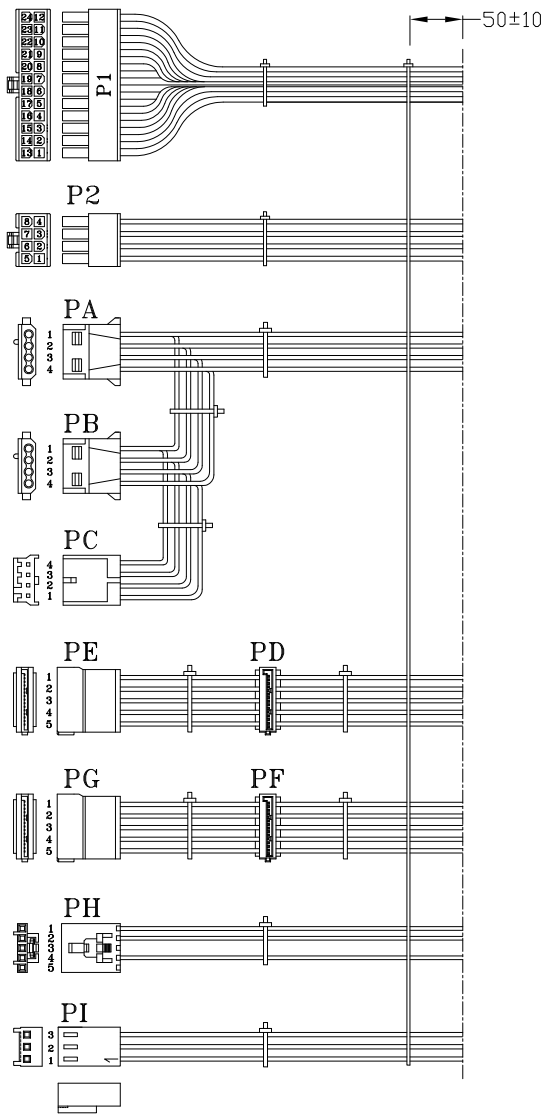

REF. ID.	PIN NO.	SIGNAL	WIRE COLOR	GAUGE	CONNECTOR TYPE	CABLE LENGTH
P1	1	+3.3VDC	ORANGE	20	MOLEX 39-01-2240 or EQUIV.	350±15mm
	2	+3.3VDC	ORANGE	20		
	3	COM	BLACK	20		
	4	+5VDC	RED	20		
	5	COM	BLACK	20		
	6	+5VDC	RED	20		
	7	COM	BLACK	20		
	8	PW-OK	GRAY	22		
	9	+5Vsb	PURPLE	20		
	10	+12V2	YELLOW	20		
	11	+12V2	YELLOW	20		
	12	+3.3VDC	ORANGE	20		
	13	+3.3VDC	ORANGE	20		
		+3.3V sence	BROWN	22		
	14	-12VDC	BLUE	22		
	15	COM	BLACK	20		
	16	PS-ON	GREEN	18		
	17	COM	BLACK	20		
	18	COM	BLACK	20		
	19	COM	BLACK	20		
	20					
	21	+5VDC	RED	20		
	22	+5VDC	RED	20		
	23	+5VDC	RED	20		
	24	COM	BLACK	20		
P2	1	COM	BLACK	20	MOLEX 39-01-2080 or EQUIV.	350±15mm
	2	COM	BLACK	20		
	3	COM	BLACK	20		
	4	COM	BLACK	20		
	5	+12V1	YEL/BLACK	20		
	6	+12V1	YEL/BLACK	20		
	7	+12V1	YEL/BLACK	20		
	8	+12V1	YEL/BLACK	20		
PA	1	+12V2	YELLOW	20	AMP 1-480424-0 or EQUIV.	350±15mm
	2	COM	BLACK	20		
	3	COM	BLACK	20		
	4	+5V	RED	20		
PB	1	+12V2	YELLOW	20	AMP 1-480424-0 or EQUIV.	155±10mm
	2	COM	BLACK	20		
	3	COM	BLACK	20		
	4	+5V	RED	20		
PC	1	+5V	RED	22	AMP 171822-4 or EQUIV.	155±10mm
	2	COM	BLACK	22		
	3	COM	BLACK	22		
	4	+12V2	YELLOW	22		
PD	1	+3.3VDC	ORANGE	20	MOLEX SD-67926-0311 or EQUIV.	350±15mm
	2	COM	BLACK	20		
	3	+5V	RED	20		
	4	COM	BLACK	20		
	5	+12V2	YELLOW	20		
PE	1	+3.3VDC	ORANGE	20	MOLEX SD-67582-001 or EQUIV.	155±10mm
	2	COM	BLACK	20		
	3	+5V	RED	20		
	4	COM	BLACK	20		
	5	+12V2	YELLOW	20		
PF	1	+3.3VDC	ORANGE	20	MOLEX SD-67926-0311 or EQUIV.	350±15mm
	2	COM	BLACK	20		
	3	+5V	RED	20		
	4	COM	BLACK	20		
	5	+12V2	YELLOW	20		
PG	1	+3.3VDC	ORANGE	20	MOLEX SD-67582-001 or EQUIV.	155±10mm
	2	COM	BLACK	20		
	3	+5V	RED	20		
	4	COM	BLACK	20		
	5	+12V2	YELLOW	20		
PH	1	SCL	BLUE	22	MOLEX 50-57-9405 or EQUIV.	350±15mm
	2	SDA	PURPLE	22		
	3					
	4	GND	BLACK	22		
	5					
PI	1	GND	BLACK	22	JWT A2543H02-3P or EQUIV.	350±15mm
	2	PS_L	GREEN	22		
	3	PS_H	RED	22		

公差: .XX=±0.5 [0.02]、.XXX=±0.25 [0.01]

P/N.:9PR3000700

MODEL NO. : FSP300-60RCB(STD0001)		TITLE: ASSY	SHEET: 1 OF 1 REV:01
R&D(2)	PE	DRAWN	DATE
		樂家龍	Sep.03.2018
INTERIOR COUNTERSIGN:			